Table of Content 6805305

1. User manual 2
2. Legal regulations 2
3. Safety instructions 3
4. Application 4
5. Functional principle 4
6. Technical data 5
7. Performance graph 6
8. Mounting 7
9. Condensate management 8
10. Mounting Principle 9
11. Cut out dimensions 10
12. Dimensions (H x W x D) 11
13. Electrical connection 12
14. Controller 13
15. Wiring diagram 18
16. Taking into operation 19
17. Trouble shooting 19
18. Maintenance & Cleaning 19
19. Maintenance 19
20. Transport & Storage 20
21. Parts supplied / Spare parts / Accessories 21

1. User manual

This instruction manual contains information and instructions to enable the user to work safely, correctly and economically on the unit. Understanding and adhering to the manual can help one:

- Avoid any dangers.
- Reduce repair costs and stoppages.
- Extend and improve the reliability and working life of the unit.

PLEASE ENSURE TO USE THE RIGHT VERSION OF THE INSTRUCTION MANUAL SUITABLE FOR YOUR UNIT.

Intended use
The unit is to be used exclusively for the dissipation of heat from control cabinets and enclosures in order to protect temperature sensitive components in an industrial enviorment. To meet the conditions of use, all the information and instructions in the instruction manual must be adhered to.

General danger
Indicates compulsory safety regulations which are not covered by a specific pictogram such as one of the following.

High electric voltage
Indicates electric shock danger.

Important safety instruction
Indicates instructions for safe maintenance and operation of the unit.

Attention
Indicates possible burns from hot components.

Attention
Indicates possible damage to the unit.

Instruction
Indicates possible danger to the environment.

2. Legal regulations

Liability
The information, data and instructions contained in this instruction manual are current at the time of going to press. We reserve the right to make technical changes to the unit in the course of its development. Therefore, no claims can be accepted for previously delivered units based on the information, diagrams or descriptions contained in this manual. No liability can be accepted for damage and production caused by:

- Disregarding the instruction manual
- Operating error
- Inappropriate work on or with the unit
- The use of non-specified spare parts and accessories
- Unauthorised modifications or changes to the unit by the user or his personnel

The supplier is only liable for errors and omissions as outlined in the guarantee conditions contained in the main contractual agreement. Claims for damages on any grounds are excluded.

3. Safety instructions

Upon delivery the unit is already meeting current technical standards and can therefore be safely taken into operation. Only authorised personnel is allowed to work on the unit. Unauthorised personnel must be prohibited from working on the unit. Operating personnel must inform their superiors immediately of any malfunction of the unit.
Please note that before starting to work on or with the unit, a procedure must be carried out inside the cabinet on which the unit is to be mounted.
Before commencing work inside the cabinet, the control cabinet manufacturer's instruction must be read with regards to:

- Safety instructions.
- Instructions on taking the cabinet out of operation.
- Instructions on the prevention of unauthorised cabinet reconnection.

The electric equipment meets the valid safety regulations. One can find dangerous voltages (above 50 V AC or above 100 V DC)

- Behind the control cabinet doors.
- On the power supply in the unit housing.

The unit has to be operated according to the type plate and the wiring diagram, and must be protected externally from overloading and electrical faults via suitable protective devices.

Danger through incorrect work on the unit
The unit can only be installed and maintained by technical competent and qualified personnel, using only supplied material according to the supplied instructions.

Danger from electrical voltage
Only specialised personnel are allowed to maintain and clean the unit. The personnel must ensure that for the duration of the maintenance and cleaning, the unit is disconnected from the electrical supply.

Attention
Damage to the unit through the use of inappropriate cleaning materials. Please do not use aggressive cleaning material.

Instruction
Damage to the environment through unauthorised disposal. All spare parts and associated material must be disposed according to the environmental laws.

4. Application

Peltier cooling units are intended to be used as a complementary accessory to larger industrial equipment. They are used where heat needs to be dissipated from electrical control cabinets or similar enclosures in order to protect heat sensitive components.
Peltier cooling units can dissipate heat from sealed enclosures such as control cabinets. At the same time they can reduce the cabinet internal temperature to below the ambient air temperature. They are available in powder-coated sheet steel or stainless steel housings.

Peltier air conditioners are resistant to extreme ambient conditions and can operate effectively even in environments which are dusty and oily and where temperatures may vary from -4°F to 149°F. For the cooling capacities and evironmental ratings please refer to the type plate data.

5. Functional principle

The thermoelectric elements create a temperature difference between the internal and ambient heat sinks, making internal air cooler while dissipating heat into the external environment. Fans help the transfer of convective heat from the heat sinks, which are optimized for maximum flow. Peltier units be mounted in any position because these units don’t have a compressor and no moving parts.

1. Ambient fans
2. Ambient heat sinks
3. Thermolelectric elements
4. Insulation
5. Internal heat sink
6. Internal fan

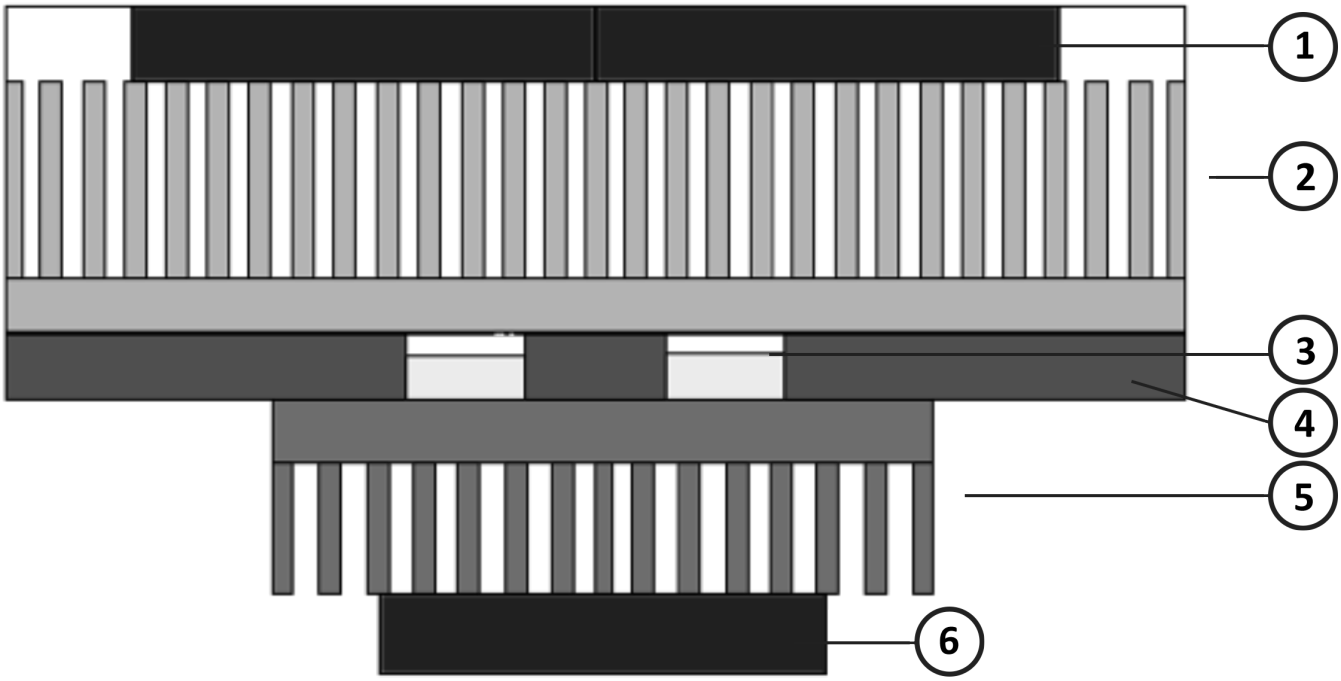

6. Technical data

Order Number	6805305
Cooling capacity 95F/95F	2730 BTU
Operating temperature range	-4°F - 149°F
UL temperature range	-20°C - 65°C
Air volume flow (system / unimpeded)	Ambient air circuit: 280 / 383 cfm Cabinet air circuit: 280 / 383 cfm
Mounting	External (with frame)
Housing Material	Stainless steel AISI 304 (V2A)
Dimension H x W x D	38.3 x 20.2 x 8.3 inch
Weight	154 lbs.
Cut out dimensions	18.3 x 36.3 inch
Voltage / Frequency	120 V, 230 V
Connection	4 pole power connector 5 pole connector for signals
Ingress protection	IP 66 / UL Type 12, 4, 4X
Approvals	CE, cURus

7. Performance graph

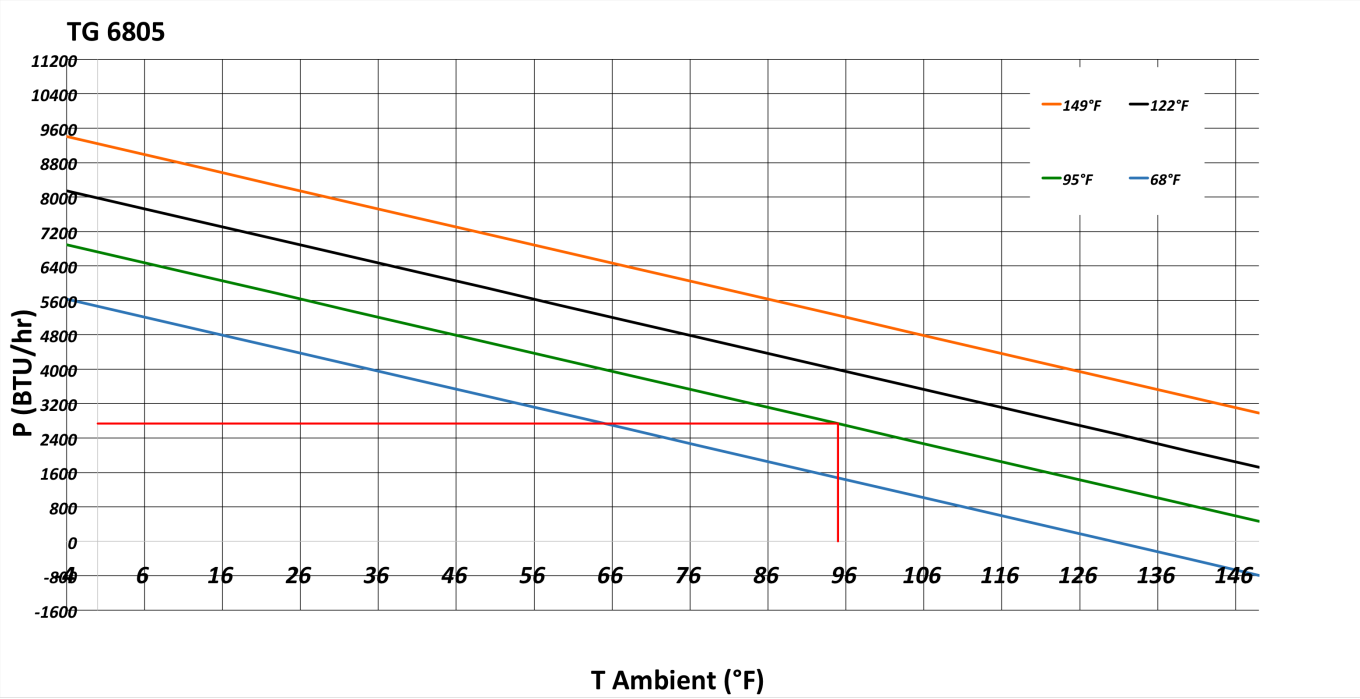

8. Mounting

Always switch off power supply before starting any work on the unit.

Installation
Ensure that flows of air leaving and entering the cooling unit, internal and external, are not obstructed. Before drilling the enclosure, ensure the fixing elements and couplings will not interfere with the equipment inside the enclosure itself. When all mounting preparations are complete the actual mounting operation can commence. Only use the enclosed material to mount the unit on the cabinet.

Proceed as follows to mount the unit on the enclosure:

- Set the unit up on the enclosure.
- Ensure that the electrical connection is above the internal fan.
- Unit without duct: screw the M5 or M6 locknuts & washers into the M5 or M6 set screws in the unit.
- Unit with duct: screw the M5 or M6 screws & washers into the M5 or M6 threaded rivets in the unit.

The resistance of the earth connection between the enclosure and cooling unit must be <0.1Ω.

9. Condensate management

Depending on the mounting situation the condensation management may need to be considered and possibly adjusted.

10. Mounting Principle

In order to maintain the TYPE 4X rating, the tightening torque for this unit should be 4.5 Nm and needs to follow the below sequence.

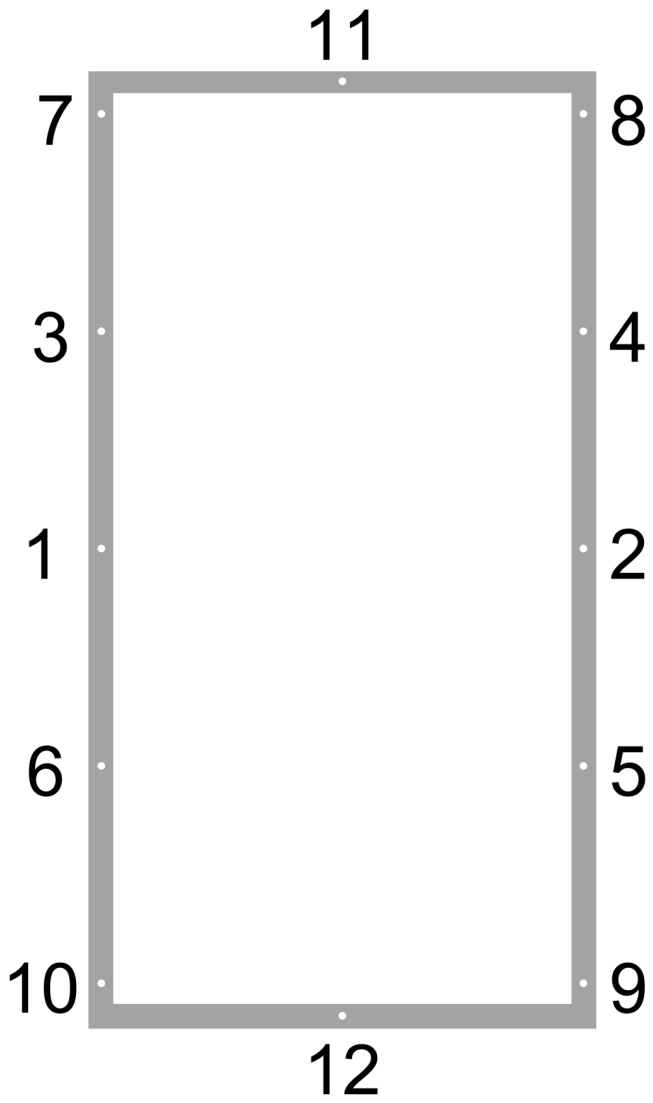

11. Cut out dimensions

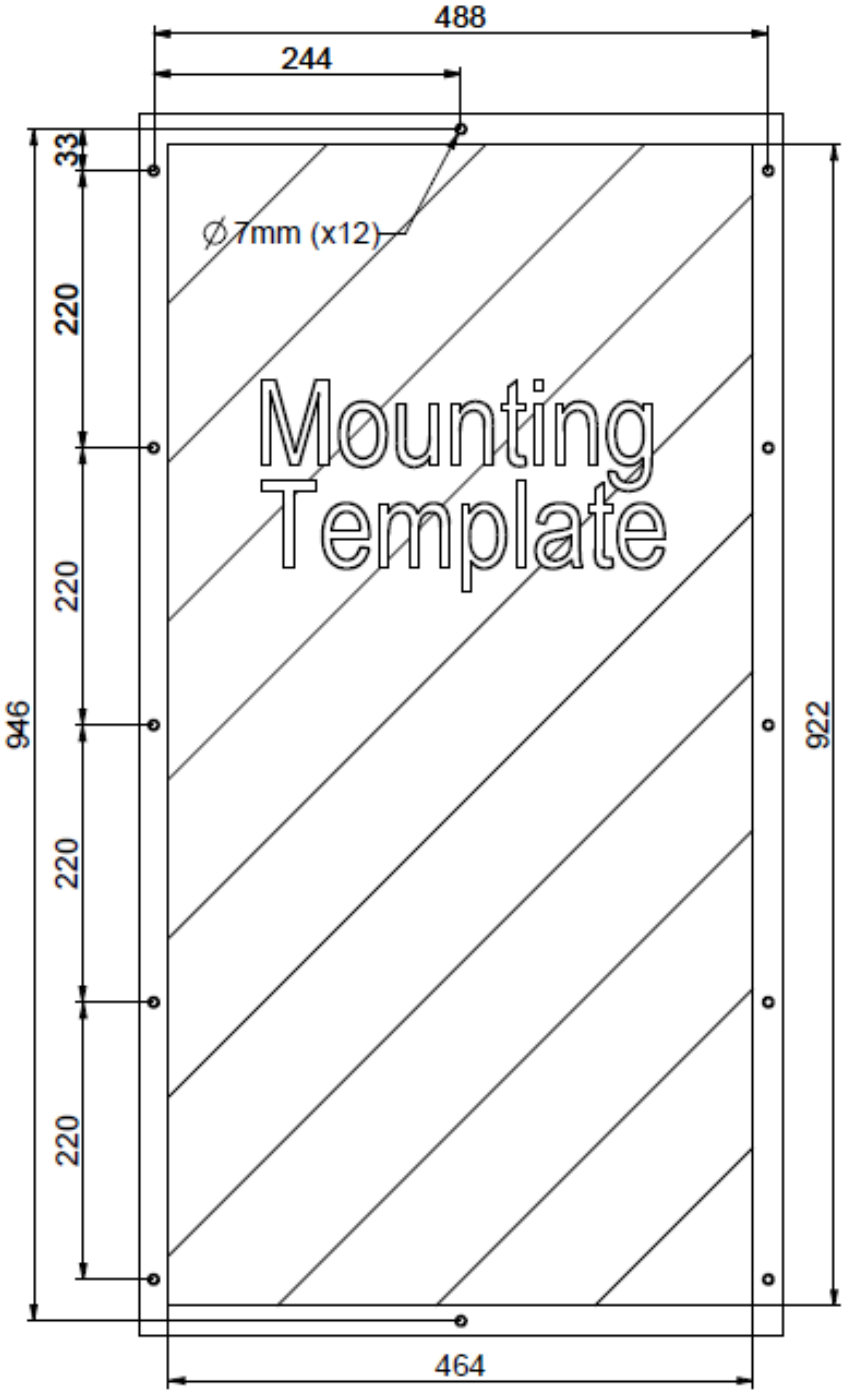

12. Dimensions (H x W x D)

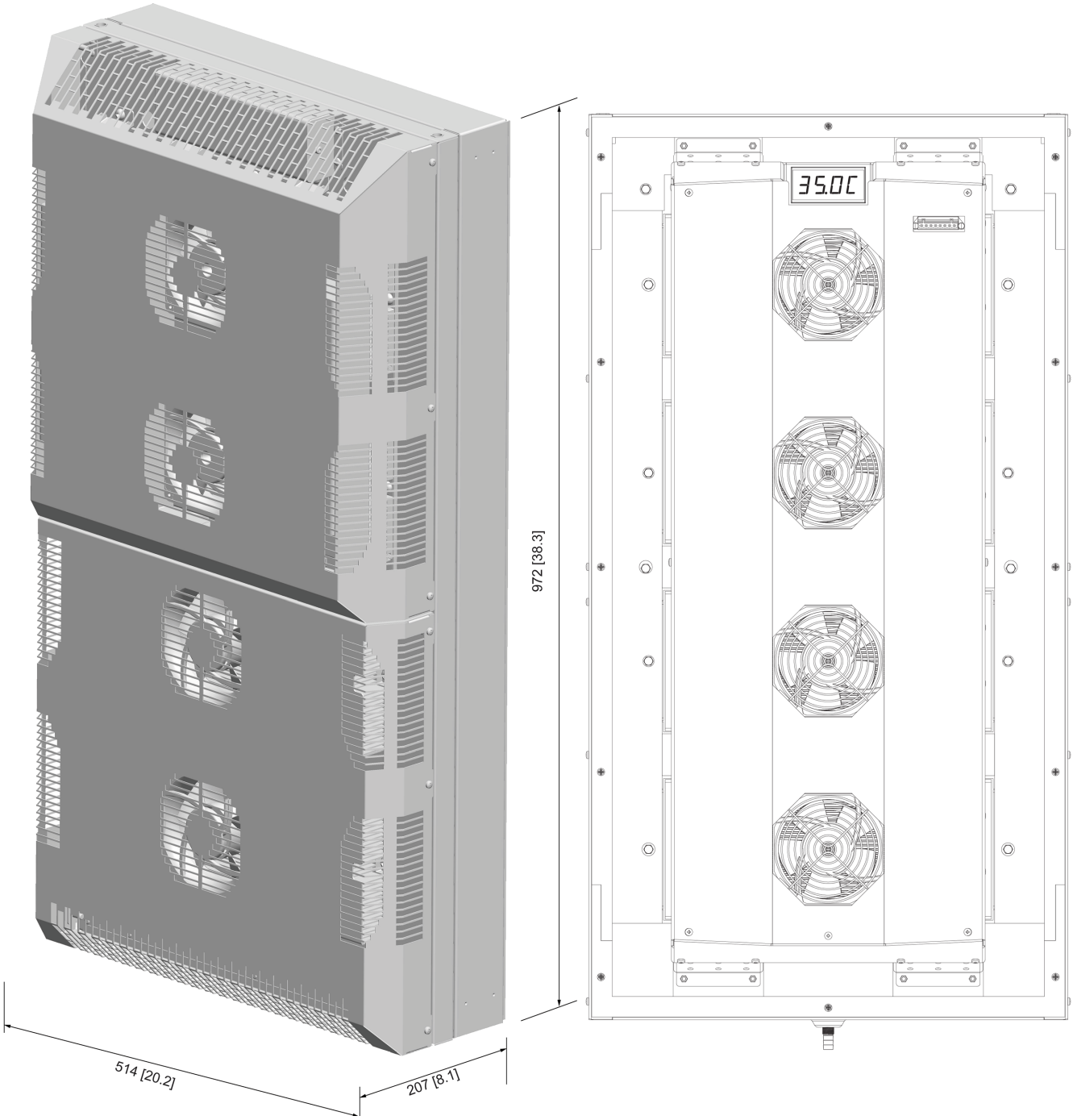

13. Electrical connection

High electric voltage present. Installation, maintenance, cleaning and any other work must be carried out by qualified personnel only. The personnel must ensure that for the duration of this work the unit and the cabinet are disconnected from the electrical supply and protected against unauthorised/accidental reconnection.

Instruction: Check that the available voltage, frequency and fuse rating are the same as those stated on the unit data label.

Connection to the main electricity supply
The mains connection is made via a cable. To connect the unit to the mains supply proceed as follows:

- Disconnect the control cabinet from the mains.
- See the connection details on the circuit diagram.
- Note the connections on the three pole terminal block from the following diagram.

Terminal 230 V~ 50/60 Hz	
L	Live
PE	Protective Earth
N	Neutral

Ensure that the correct polarity is maintained. The fans should have clockwise rotation.

- Connect the unit to the mains.
- Take the control cabinet back into operation in the prescribed manner.

Power consumption and start-up current are stated on the data label and under technical data.

14. Controller

This Peltier unit is equipped with a controller to set and change important system parameters.

Display

Normal operation (not cooling):
Display shows measured temperature

Normal operation (cooling):
Cooling setpoint: 35°C, hysteresis: 5°C
Display shows measured temperature

High temperature alarm condition:
HI temperature alarm setpoint: 45°C
Display alternates: measured temperature and HI

Low temperature alarm condition:
LO temperature alarm setpoint: 5°C
Display alternates: measured temperature and LO

Changing the COOLING setpoint

Press for 3 sec.

Press when 3 dashes appear

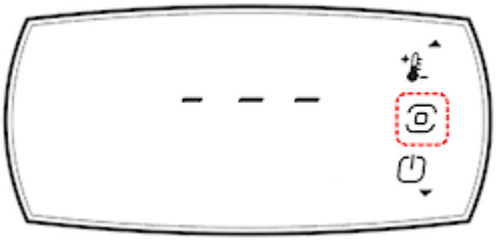

Move up / down until CTL appears

Press to display ST
Press again to display setpoint

Change setpoint using up / down

When ready press
Press up / down until ESC appears

Press to return

Changing the HIGH TEMP ALRAM setpoint

Press for 3 sec.

Press when 3 dashes appear

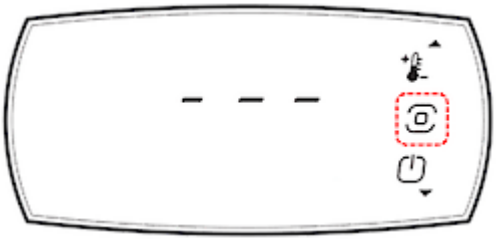

Move up / down until ALM appears

Press and up / down to display AHA

Press again to display setpoint

Change setpoint using up / down

When ready press
Press up / down until ESC appears

Press to return

Changing the LOW TEMP ALRAM setpoint

Press for 3 sec.

Press when 3 dashes appear

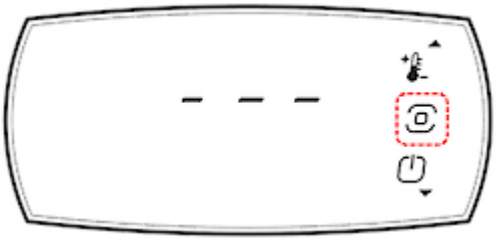

Move up / down until ALM appears

Press and up / down to display ALA

Press again to display setpoint

Change setpoint using up / down

When ready press
Press up / down until ESC appears

Press to return

Changing units from °C to °F

Press for 3 sec.

Press when 3 dashes appear

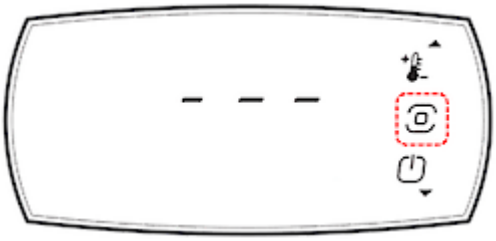

Move up / down until PRO appears

Press to display /5

Press again to display set value
(note: 0 = C / 1 = F)

Change set value using up / down

When ready press
Press up / down until ESC appears

Press to return

15. Wiring diagram

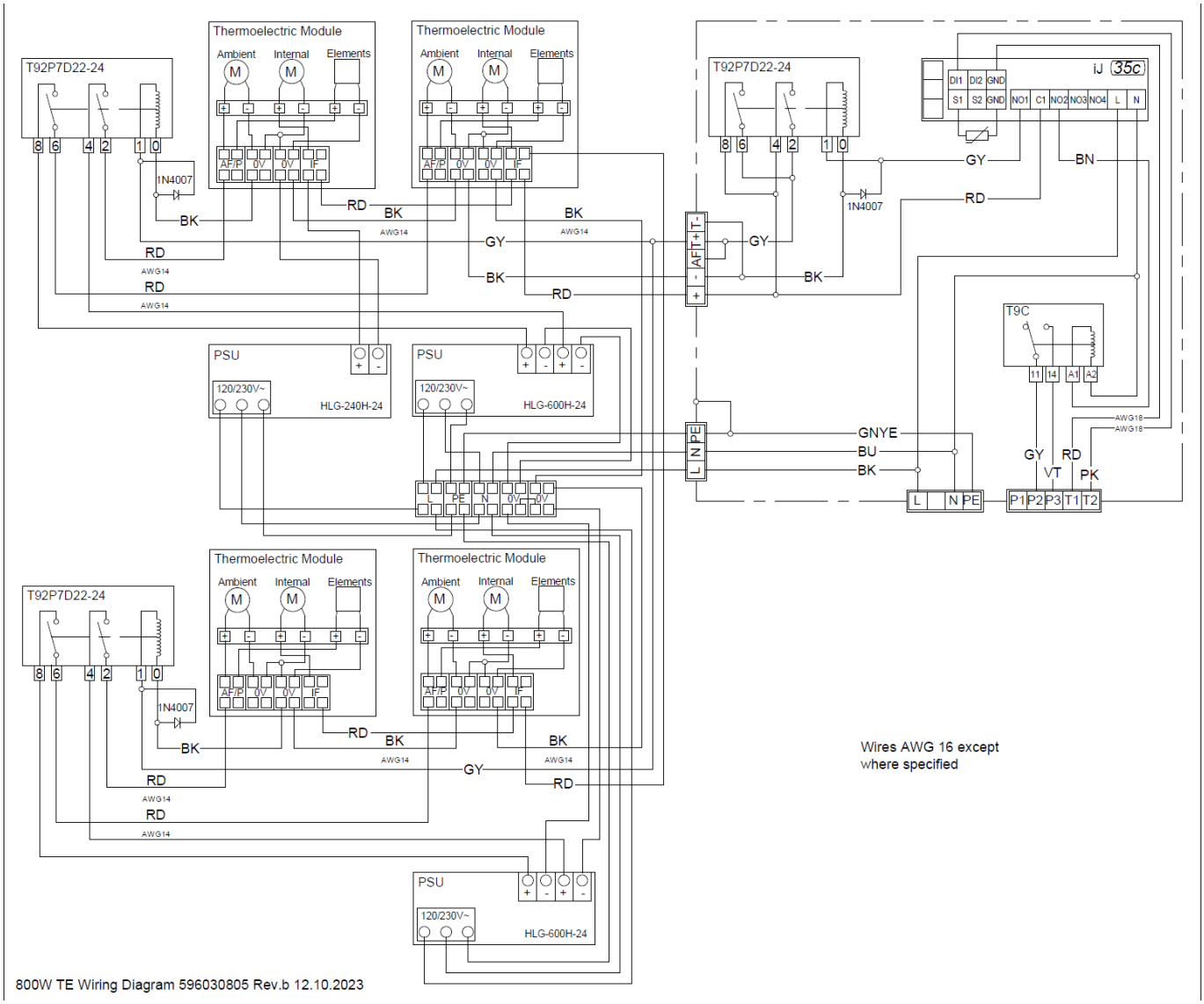

16. Taking into operation

The power supply rating on the rating plate must comply with mains supply

Always disconnect the power supply before opening the unit.

Heat load to be dissipated from enclosure should not exceed specific cooling output of the unit at any condition. While selecting a cooling unit always cater for a safety margin of at least 15% extra cooling output.The Peltier - elements should be controlled by a suitable thermostat. Models TG 6XXX with 230 V supply have already a controller integrated

17. Trouble shooting

In case of a fault please contact your nearest servicing office. A list of service partners can be found on our website www.seifertsystems.com

18. Maintenance & Cleaning

Always switch off power supply before starting any work on the unit. Only qualified personal may conduct any maintenance work on the cooling unit.

All Peltier units are virtually maintenance-free and no filters which need to be cleaned or replaced. Check the ambient heat sinks from time to time. In case they are durty proceed as following:

- Disconnect the enclosure from the mains.
- Clean the heat sink profile as required by blowing it out with compressed air.
- In cases of extreme pollution wet cleaning is required.

The unit must be removed from the control cabinet for wet cleaning

Should a wet cleaning be necessary proceed as following:

- Disconnect the whole plant from the mains.
- Remove the unit from the cabinet.
- Ensure that the seals are not damaged.
- Wash the heat sink with an environmentally safe cleaning fluid.

Danger to the environment through unauthorized disposal.

Disposal
Dispose of cooling unit and used parts with due regard for the environment and in accordance with environmental laws and regulations.

19. Maintenance

Note: Only use original replacement parts when repairing the unit. This ensures that the unit functions perfectly and remains safe.

Fan replacement: The average working life of the fan is ca. 40,000 hours under normal conditions. Should a fan replacement be necessary proceed as following:

- Disconnect the unit from the mains.
- Remove the unit cover.
- Remove the screws from the relevant fan.
- Mount a new fan.

Damage to the unit through incorrect work.
Make sure that the cabinet fan or the ambient fan are not misplaced in the unit as they are different. Ensure that the correct polarity is maintained. The fans must rotate clockwise!

- Replace the 4 fan fixing screws.
- Close the unit and take it back into operation.

20. Transport & Storage

During transport and storage the cooling unit must be kept in the position marked on the box and at a temperature between -40˚F and 158˚F and a relative humidity of max. 95% (at 77°F). In case of damaged packaging after transport or in-house handling, we recommend controlling the unit for any internal damages

21. Parts supplied / Spare parts / Accessories

Description	QTY	Image
Instruction manual	1	
CE Declaration	1	
Mounting template	1	
Mounting Gasket Set	1	
Screws M5*16	12	
Toothed washer M5 A2	12	
Washer A2	12	
IP 66 mini drain plug	1	
Nylon washer	1	
Lifting hook M18 x 12	1	
PVC washer	1	
Drain fitting	1	
Lock nut M12	1	
Drain pipe	2	
Female connector	1	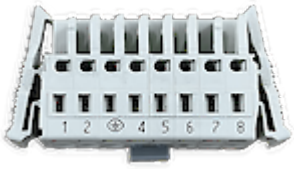

Accessories:

Description	Order no.

Seifert Systems GmbH
Albert-Einstein-Str. 3

42477 Radevormwald
Germany
Tel.+49 2195 68994-0
info.de@seifertsystems.com

Seifert Systems Ltd.
HF09/10
Hal-Far Industrial Estate
Birzebbuga, BBG 3000
Malta
Tel.+356 2220 7000
info@seifertsystems.com

Seifert Systems AG
Wilerstrasse 16

4563 Gerlafingen
Switzerland
Tel.+41 32 675 35 51
info.ch@seifertsystems.com

Seifert Systems GmbH
Bärnthal 1

4901 Ottnang
Austria
Tel.+43 7676 20712 0
info.at@seifertsystem.com

Seifert Systems Ltd.
Rep. Office

26100 Cremona
Italy
Tel.+39 349 259 4524
info@seifertsystems.com

Seifert Systems Inc.
75 Circuit Drive
North Kingstown
RI 02852
USA
Tel.+1 401-294-6960
info.us@seifertsystems.com

Seifert Systems Pty Ltd.
105 Lewis Road
Wantirna South
3152 Victoria
Australia
Tel.+61 3 98 01 19 06
info@seifertsystems.com.au