Table of Content 580141001

1. User manual 2
2. Legal regulations 3
3. Safety instructions 4
4. Functional principle 5
5. Technical data 5
6. Performance graph 6
7. Mounting 7
8. Mounting Principle 8
9. Cut Out Dimension 9
10. Dimension (H x W x D) 10
11. Controller 11
12. Wiring Diagram 14
13. Taking into Operation 15
14. Trouble Shooting 15
15. Maintenance & Cleaning 15
16. Transport & Storage 16
17. Parts supplied / Spare parts / Accessories 17

1. User manual

This instruction manual contains information and instructions to enable the user to work safely, correctly and economically on the unit. Understanding and adhering to the manual can help one:

- Avoid any dangers.
- Reduce repair costs and stoppages.
- Extend and improve the reliability and working life of the unit.

PLEASE ENSURE TO USE THE RIGHT VERSION OF THE INSTRUCTION MANUAL SUITABLE FOR YOUR UNIT.

Intended use
The unit is to be used exclusively for the dissipation of heat from control cabinets and enclosures (stationary, not moving) in order to protect temperature sensitive components in an industrial environment. To meet the conditions of use, all the information and instructions in the instruction manual must be adhered to.

General danger
Indicates compulsory safety regulations which are not covered by a specific pictogram such as one of the following.

High electric voltage
Indicates electric shock danger.

Important safety instruction
Indicates instructions for safe maintenance and operation of the unit.

Attention
Indicates possible burns from hot components.

Attention
Indicates possible damage to the unit.

Instruction
Indicates possible danger to the environment.

2. Legal regulations

Liability
The information, data and instructions contained in this instruction manual are current at the time of going to press. We reserve the right to make technical changes to the unit in the course of its development. Therefore, no claims can be accepted for previously delivered units based on the information, diagrams or descriptions contained in this manual. No liability can be accepted for damage and production caused by:

- Disregarding the instruction manual
- Operating error
- Inappropriate work on or with the unit
- The use of non-specified spare parts and accessories
- Unauthorised modifications or changes to the unit by the user or his personnel

The supplier is only liable for errors and omissions as outlined in the guarantee conditions contained in the main contractual agreement. Claims for damages on any grounds are excluded.

3. Safety instructions

Upon delivery the unit is already meeting current technical standards and can therefore be safely taken into operation. Only authorised personnel is allowed to work on the unit. Unauthorised personnel must be prohibited from working on the unit. Operating personnel must inform their superiors immediately of any malfunction of the unit.
Please note that before starting to work on or with the unit, a procedure must be carried out inside the cabinet on which the unit is to be mounted.
Before commencing work inside the cabinet, the control cabinet manufacturer's instruction must be read with regards to:

- Safety instructions.
- Instructions on taking the cabinet out of operation.
- Instructions on the prevention of unauthorised cabinet reconnection.

The electric equipment meets the valid safety regulations. One can find dangerous voltages (above 50 V AC or above 100 V DC)

- Behind the control cabinet doors.
- On the power supply in the unit housing.

The unit has to be operated according to the type plate and the wiring diagram, and must be protected externally from overloading and electrical faults via suitable protective devices.

Danger through incorrect work on the unit
The unit can only be installed and maintained by technical competent and qualified personnel, using only supplied material according to the supplied instructions.

Danger from electrical voltage
Only specialised personnel are allowed to maintain and clean the unit. The personnel must ensure that for the duration of the maintenance and cleaning, the unit is disconnected from the electrical supply.

Attention
Damage to the unit through the use of inappropriate cleaning materials. Please do not use aggressive cleaning material.

Instruction
Damage to the environment through unauthorised disposal. All spare parts and associated material must be disposed according to the environmental laws.

4. Functional principle

5. Technical data

Order Number	580141001
Heat exchanger performance	14 W/K
Operating Temperature Range	-5°C - 55°C
Air flow volume (system / unimpeded)	Ambient air circuit: 119 / 300 m³/h Cabinet air circuit: 96 / 300 m³/h
Mounting	Wall mounted
Housing Material	Mild steel, powder coated
Dimensions A x B x C (D+E)	749 x 254 x 151 mm
Weight	11 kg
Voltage / Frequency	120 V ~ 60 Hz
UL Voltage / Frequency	120 V ~ 60 Hz
Starting current	1.3 A
Max. current	1.1 A
Max. power	120 W
Fuse	1.6 A (T)
Connection	8 - pin connector
Ingress Protection	IP 54 / NEMA 12
Approvals	CE, cURus

6. Performance graph

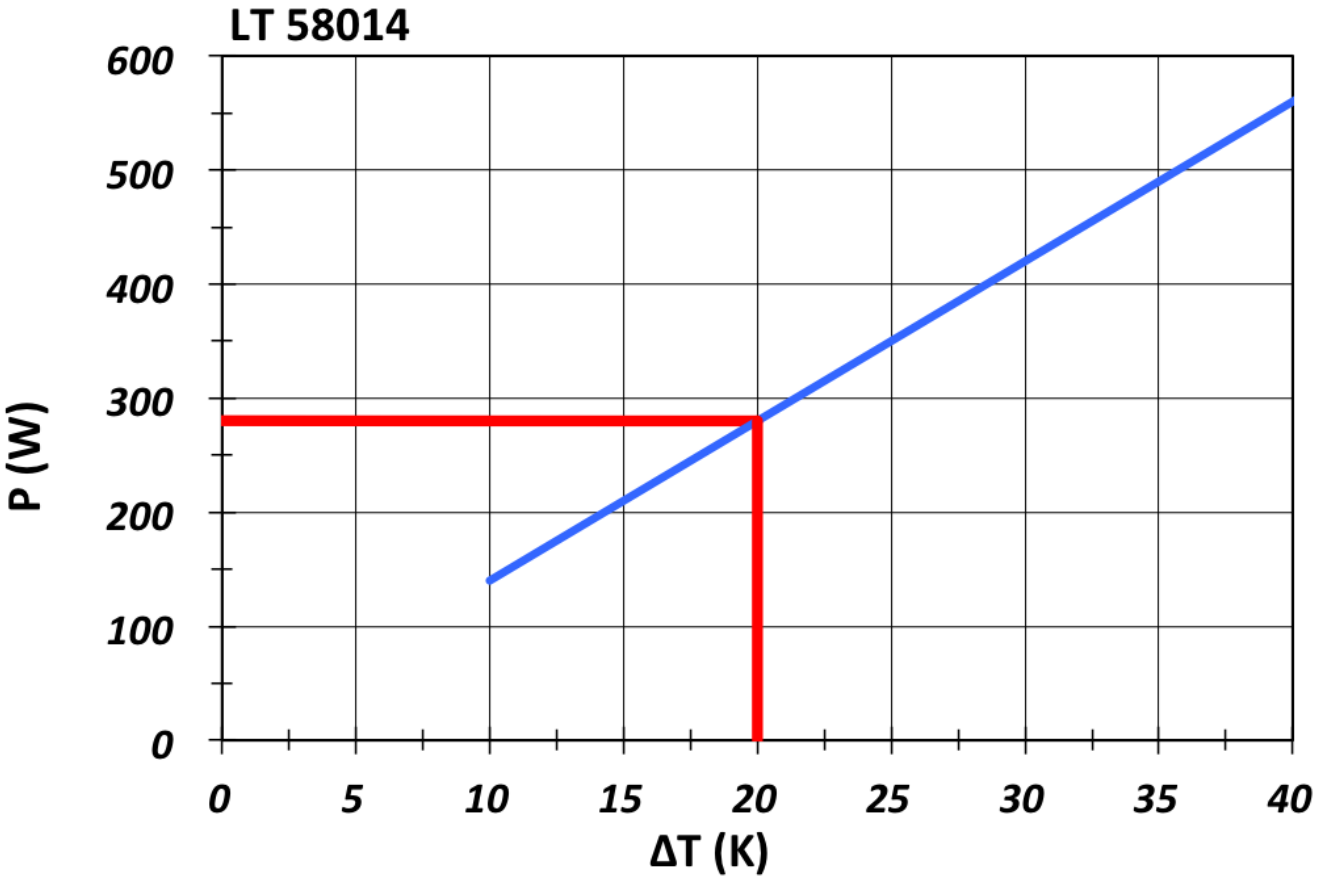

7. Mounting

Danger from electrical voltage
The unit must be mounted by specialist personnel (qualified electricians). The personnel must ensure that the cabinet is disconnected from the electrical supply for the duration of the mounting operation. Therefore take the cabinet out of operation, following the relevant instructions before mounting work commences.

Danger through incorrect work on the unit. Only specialists are allowed to put the unit into operation.

Mounting preparations
Several points must be checked before the unit can be mounted. These checks must be made to ensure safety and the trouble-free operation of the unit. These checks must be carried out with absolute thoroughness to ensure that the unit works perfectly.

Transport damage check
On delivery the carton containing the unit must be examined for signs of transport damage. Any transport damage to the carton could indicate that the unit itself has been damaged in transit which in the worst case could mean that the unit will not function.

Location and space requirements
The location of the cabinet must allow for sufficient air circulation to and from the unit. The unit should be mounted roughly vertically.

Sealing
To guarantee that the unit works perfectly ensure that, the control cabinet is completely sealed (to min. IP54 to EN 60529) and a good seal exists between the control cabinet and the unit. If necessary the cabinet mounting surface should be reinforced.

8. Mounting Principle

1 Heat exchanger
2 Mounting gasket
3 Slotted stud M6 x 25 mm
4 Enclosure
5 Washer A6.4
6 M6 Lock nut

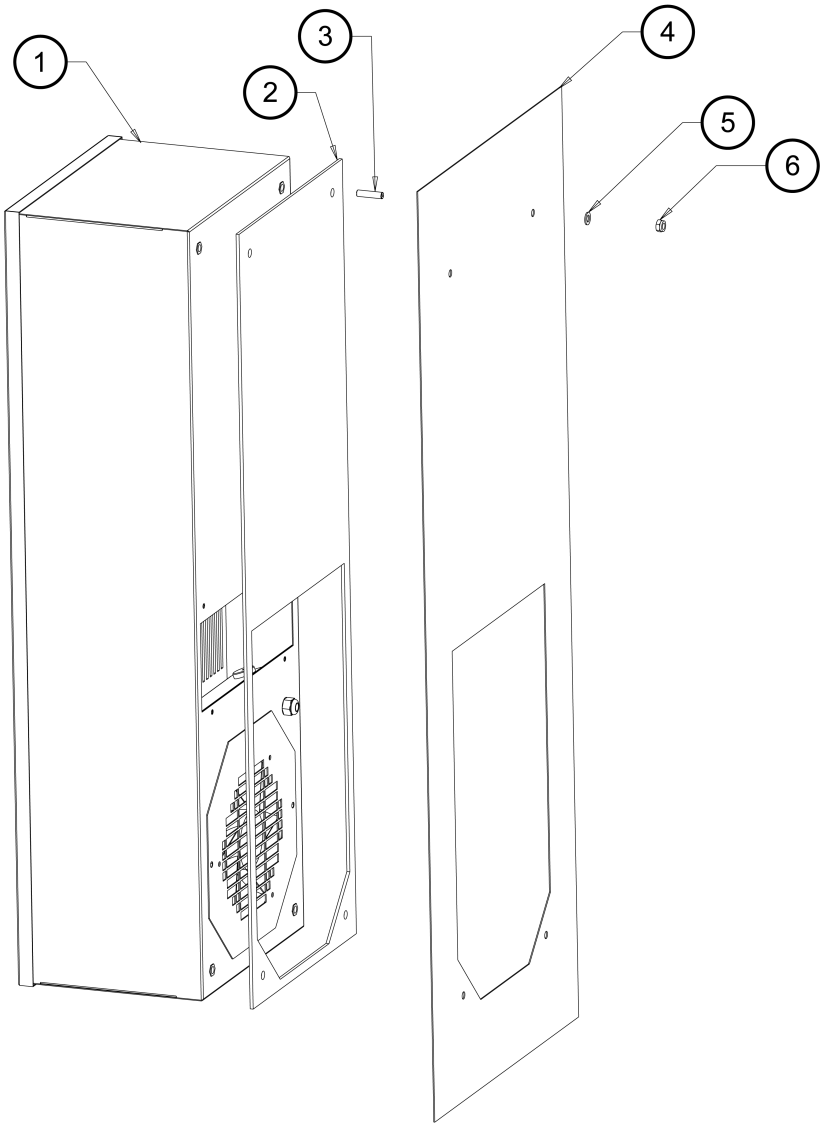

9. Cut Out Dimension

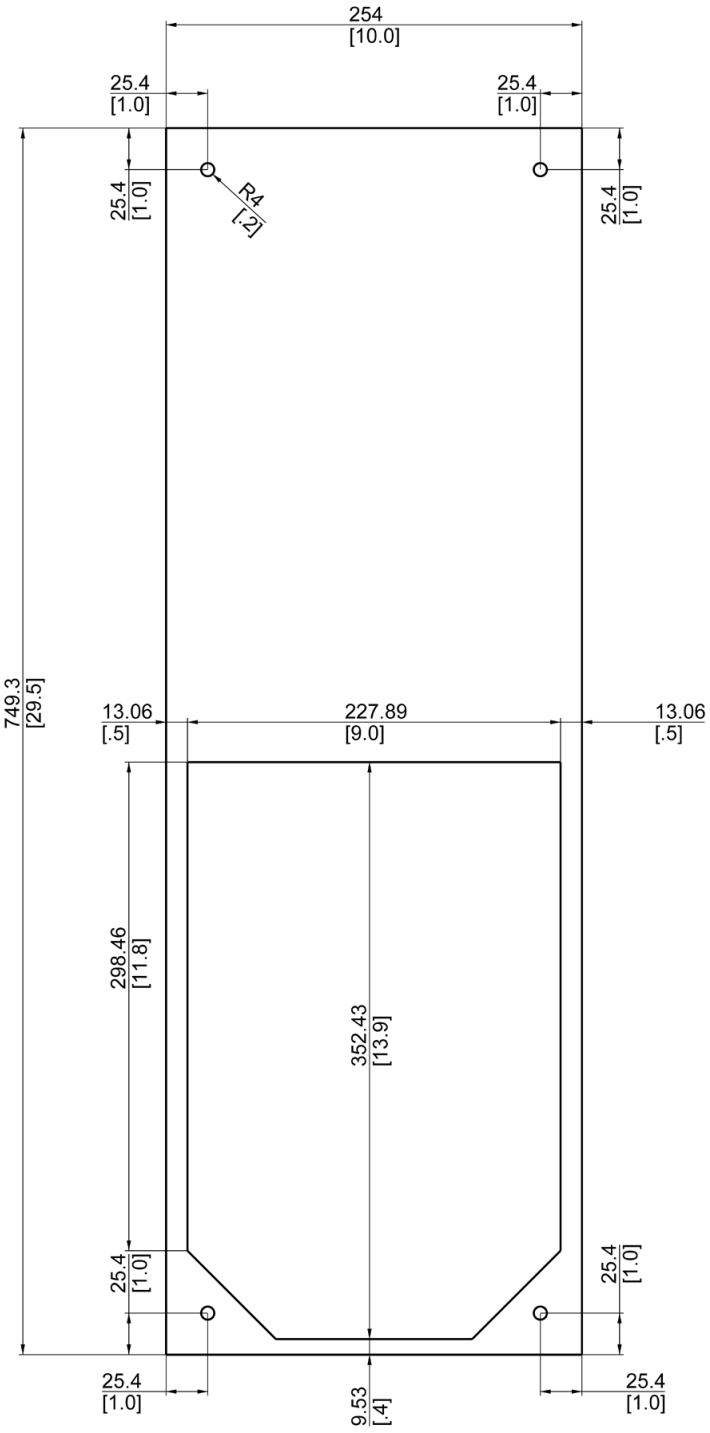

10. Dimension (H x W x D)

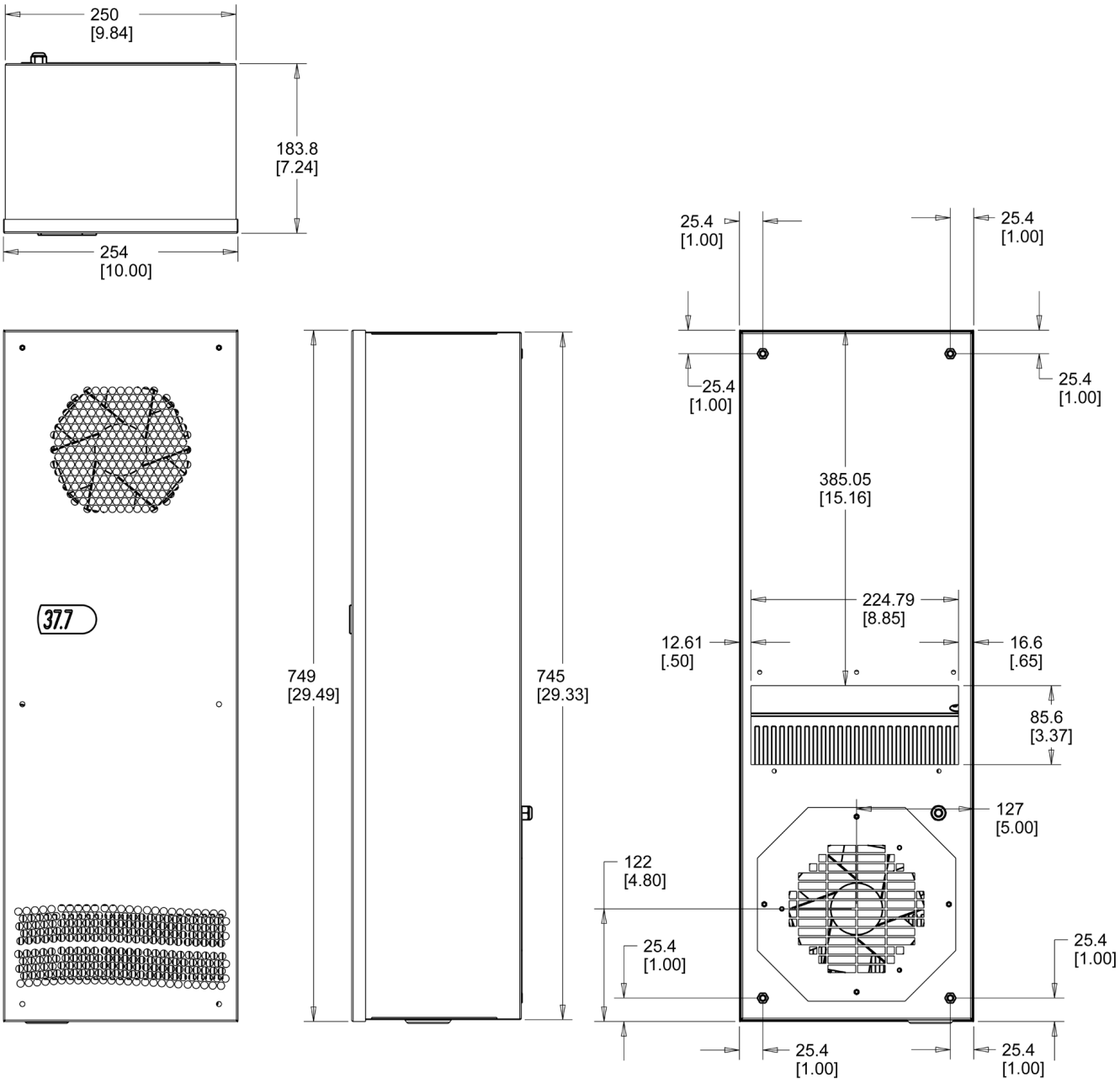

11. Controller

Air-air heat exchangers are intended as complementary accessories to large industrial equipment which include a motor-operated fan or blower together with a heat exchanger module. These may also include an electric heater. The fan or blower is intended to recirculate air and allow heat exchange. The heat exchanger is designed for air heat transfer only. Cooling function may be controlled by an on-board or remote controller or thermostat. Heating function, when installed is provided by an electrical heating element.

The unit seals the enclosure which ensures that the clean air inside does not come into contact with the ambient air which may well be dirty or polluted. The unit is fit for purpose within the rated/declared ambient conditions (e.g. dusty and oily air or high air temperatures between -5°C and 55°C), also indicating the rated allowable ingress and environment. Heat exchangers are used where the heat generated by energy losses in control cabinets must be conducted away to protect temperature-sensitive components. The characteristic graph shown in the section “Performance graph” applies to external (ambient) air as the coolant. In air-to-air heat exchangers, the internal temperature of the control cabinet cannot be cooler than the ambient temperature. There are natural limits to the cooling performance, dependent on the air supply temperature and the requirement for a temperature difference of at least 5K. Unlike systems in which the heat generated is allowed to escape by air convection through ventilation slots, with the heat exchanger, the clean air inside the control cabinet is prevented from mixing with the air outside, which may well be unclean.

Controller

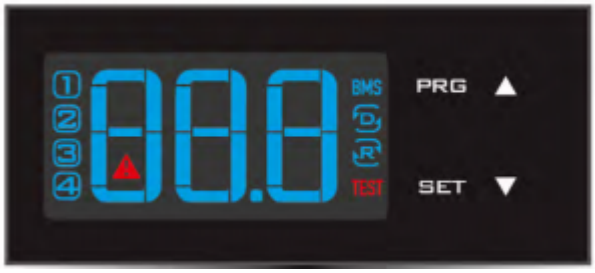

The display shows the temperature in the range of -50°C to 150°C (-58°F to 302°F). The temperature is displayed with resolution of tenths between -19.9°C and 99.9°C (-3.8°F to 211.8°F). During programming, it shows the codes and values of the parameters. The display also shows icons according to occurring events.

Display icons

Icon	Function	Description
1	Cooling relay active	Flashes when activation is delayed or inhibited by protection times, external disabling or other procedures in progress
2	Alarms relay active	
3	Heating relay active	
4	Ambient blower relay active	
⚠	Alarm	Flashes when alarms are active
R	Heating mode	Signals operation of unit in heating mode
D	Cooling mode	Signals operation of unit in cooling mode
TEST	Test mode in progress	Activated only by manual procedure

Programming
The operating parameters can be modified using the front keypad. Access differs depending on the type of parameter. Access to configuration parameters is protected by a password that prevents unwanted modifications or access by unauthorised persons.

Setting cooling set point, St1:

1. Press *"SET"* and display should show St1 and then the pre-set value of St1. (default: 35°C / 95°F)
2. Reach the desired value by using ▲ or ▼.
3. Press *"SET"* again to save the new value of St1.

Setting heating set point, St2 (only for units supplied with internal heater):

1. Press *"SET"* twice slowly and display should show St2 and then the pre-set value of St2. (default: 5°C / 41°F)
2. Reach the desired value by using ▲ or ▼.
3. Press *"SET"* again to save the new value of St2.

Setting temperature unit, low temperature alarm and high temperature alarm:

1. Press *"PRG"* button for 5 seconds to reach the modifiable parameter list.
2. Use ▲ or ▼ to reach the desired parameter:

- C18 for temperature unit of measure
- °C = 0
- °F = 1
- P25 for low temperature alarm threshold (default -10°C / 14°F)
- P26 for high temperature alarm threshold (default 55°C / 131°F)

3. Press *"SET"* on the desired parameter to display the current value.
4. Use ▲ or ▼ to reach the desired value.
5. Pressing *"SET"* temporarily saves the new value and returns to the parameters list.
6. Repeat steps 2-5 to set other parameters.
7. Press *"PRG"* for 5 seconds to permanently save the new values.

Test function
Different test functions can be used depending on the combination of keys pressed. Such tests run for the duration of 4 minutes.

- *"SET+▲"* tests cooling relays.
- *"SET+▼"* tests Alarms and Heater relays

Important Notes

- Whilst programming, if no button is pressed for 10 seconds, the display starts flashing, and after 1 minute returns to the main display without saving changes.
- To increase scrolling speed, press and hold the ▲ or ▼ button for at least 5 seconds.
- When pressing *"PRG"* for 3 seconds, the firmware revision code is displayed for 2 seconds.
- When cleaning the controller panel, do not use ethanol, hydrocarbons, ammonia or their by-products. Use neutral detergents and water.

12. Wiring Diagram

Power connector	
1	L
2	N
3	PE
4	Alarm (NO)
5	Alarm (COM)
6	Alarm (NC)
7	Door contact
8	Door contact

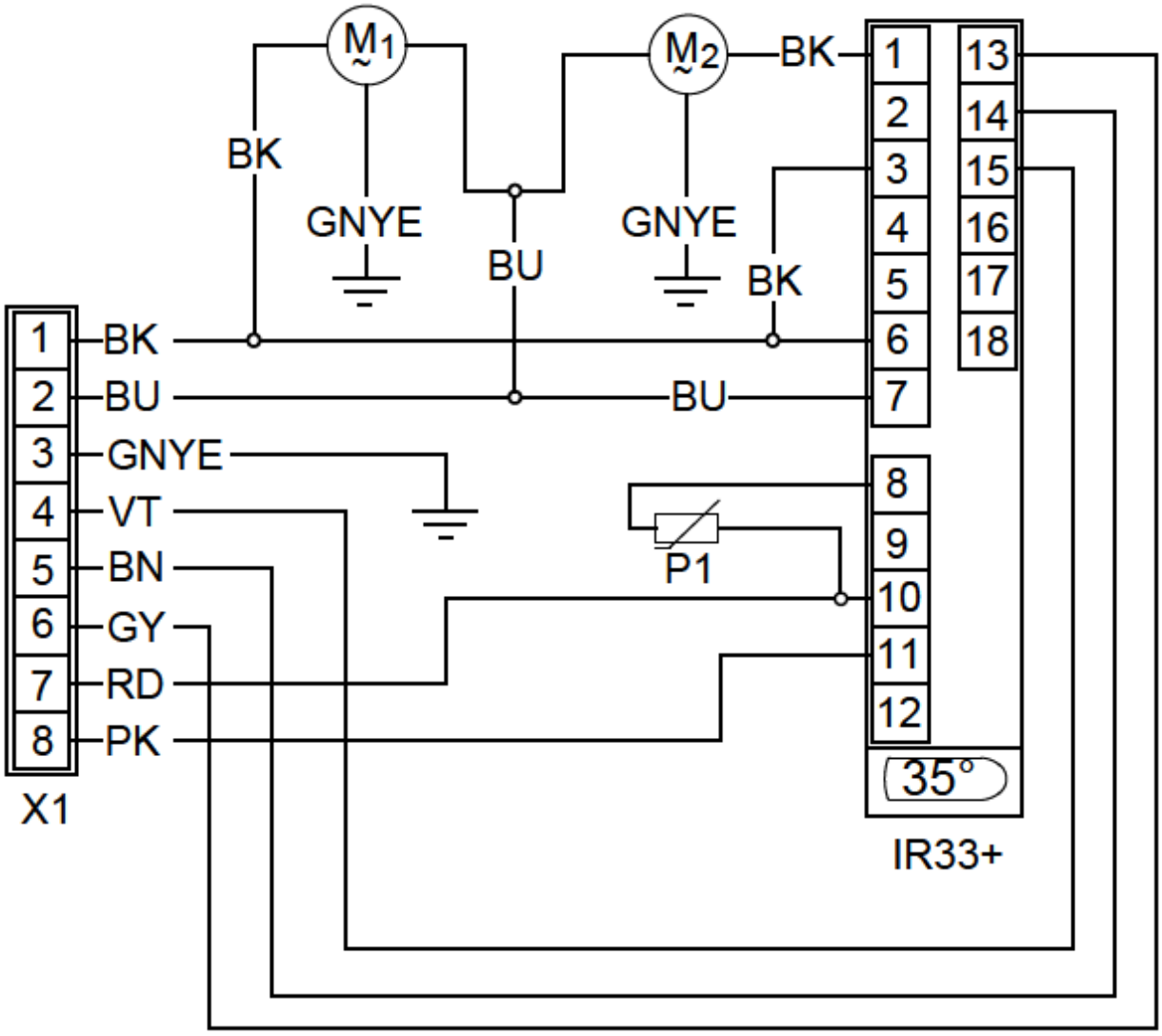

Part List:
X1 - 8 Pole Connector
P1 - Temperature Sensor Probe
M1 - Internal Blower
M2 - Ambient Blower

13. Taking into Operation

As described before the unit is controlled in relation to the cabinet internal temperature. The required cabinet temperature can be set on the potentiometer on the controller.The temperature adjustment range is between 0°C (left-hand stop) and 60°C (right-hand stop). The thermostat is pre-set at 35°C.

To adjust the cabinet internal temperature proceed as follows:

- Remove the MCB access plate on the front of the unit.
- Using a screw driver turn the adjustment wheel on the potentiometer “TEMP” slightly to the right (higher) or to the left (lower).
- Please note that the setting for the alarm signal should be at least 5 - 10°C higher than the setting for the cabinet internal temperature.

Check that the new adjustment meets the necessary requirements. If necessary, repeat the procedure. Inspect and if necessary replace the MCB access plate sealing tape.

14. Trouble Shooting

In case of a fault logon to our website www.seifertsystems.com to locate your nearest servicing office or find your nearest contact in the chapter “contacts” in this manual.

15. Maintenance & Cleaning

Danger from electrical voltage
Maintenance and cleaning must be carried out by specialists (electricians). The personnel must ensure that for the duration of this work the unit and the cabinet are disconnected from the electrical supply and protected against unauthorised reactivation.

Danger through incorrect work on the unit.
The instructions in the cabinet manufacturer’s manual must be adhered to!

Damage to the unit through incorrect maintenance and repair! Maintenance and repair must be carried out by the manufacturer or another specialist.

Fan replacement

The rated life expectancy of the fan is L10 =30,000 hours under normal operating conditions.

To replace the internal or external fan, please proceed as following:

- Remove the internal access panel by unscrewing the 10 fixing screws.
- Disconnect the blower cables from the connectors.
- Unscrew the four screws fixing the blower bracket to the cabinet.
- Unscrew the fan from the bracket.
- Re-assembly with the new blower is in reverse order.

Make sure that the blower cable length is the same as the one of the removed fan to ensure that the cable does not come in contact with the blower while in operation. Make sure that the correct polarity is maintained. (Refer to circuit diagram). Inspect and if necessary replace the internal access panel sealing tape.
In addition the unit should have regular functional tests (approx. every 2,000 hours depending on the grade of ambient pollution).

16. Transport & Storage

Malfunction due to transport damage
On delivery the carton containing the unit must be examined for signs of transport damage. Any transport damage to the carton could indicate that the unit itself has been damaged in transit which in the worst case could mean that the unit will not function.

Storage conditions

The unit can only be stored in locations which meet the following conditions:

Temperature range: - 40°C to + 70°C
Relative humidity (at 25°C): max. 95%

Returning the unit

Damage to the unit through incorrect transport.

To avoid transport damage the unit should be returned in the original packing or in a packing case and must be strapped to a pallet!

If the unit cannot be returned in the original packing please ensure that:

- A space of at least 30 mm. must be maintained at all points between the unit and the external packing.
- The unit must be firmly fixed in the packing.
- The unit must be protected sufficiently by shock absorbing padding (hard foam corner pieces, strips or cardboard corner pieces).

17. Parts supplied / Spare parts / Accessories

Description	QTY	Image
Instruction manual	1	
CE Declaration	1	
Mounting template	1	
M6 * 25 Slotted stud	4	
A6.4 washer	4	
M6 nuts	4	
Drain pipe	1	
Silicone washer	1	
Drain fitting	1	
Female connector	1	

Seifert Systems GmbH
Albert-Einstein-Str. 3

42477 Radevormwald
Germany
Tel.+49 2195 68994-0
info.de@seifertsystems.com

Seifert Systems Ltd.
HF09/10
Hal-Far Industrial Estate
Birzebbuga, BBG 3000
Malta
Tel.+356 2220 7000
info@seifertsystems.com

Seifert Systems AG
Wilerstrasse 16

4563 Gerlafingen
Switzerland
Tel.+41 32 675 35 51
info.ch@seifertsystems.com

Seifert Systems GmbH
Bärnthal 1

4901 Ottnang
Austria
Tel.+43 7676 20712 0
info.at@seifertsystem.com

Seifert Systems Ltd.
Rep. Office

26100 Cremona
Italy
Tel.+39 349 259 4524
info@seifertsystems.com

Seifert Systems Inc.
75 Circuit Drive
North Kingstown
RI 02852
USA
Tel.+1 401-294-6960
info.us@seifertsystems.com

Seifert Systems Pty Ltd.
105 Lewis Road
Wantirna South
3152 Victoria
Australia
Tel.+61 3 98 01 19 06
info@seifertsystems.com.au